| REVISIONS | | | |
|---|---|---|---|
| REV. NO. | DESCRIPTION | DATE | BY |
| | | | |

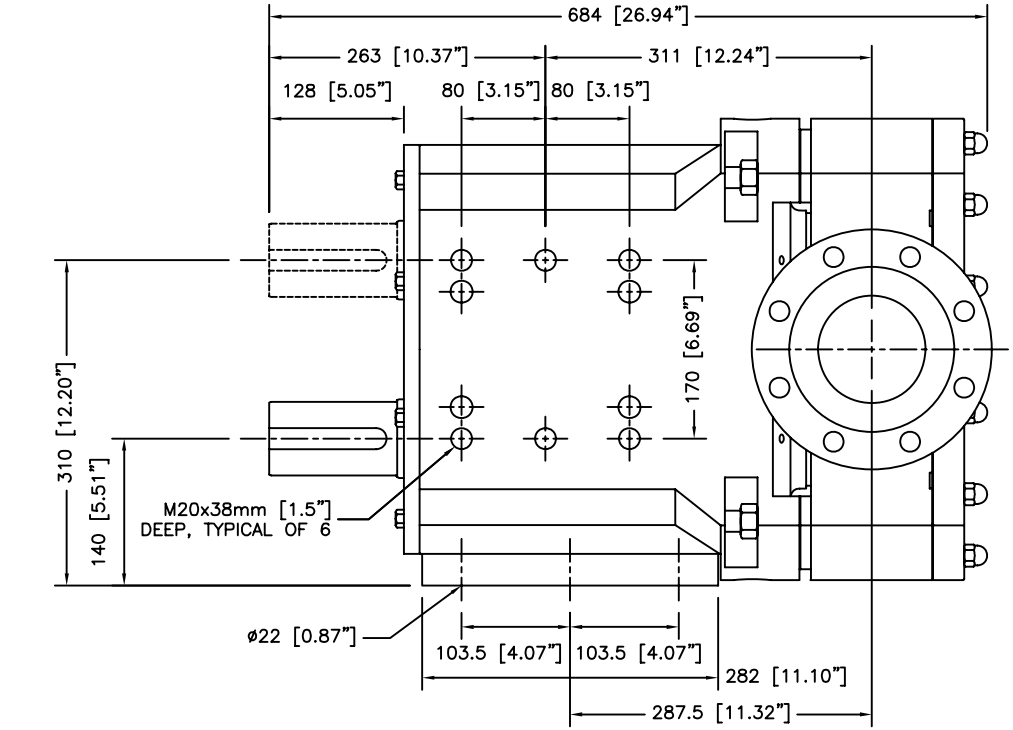


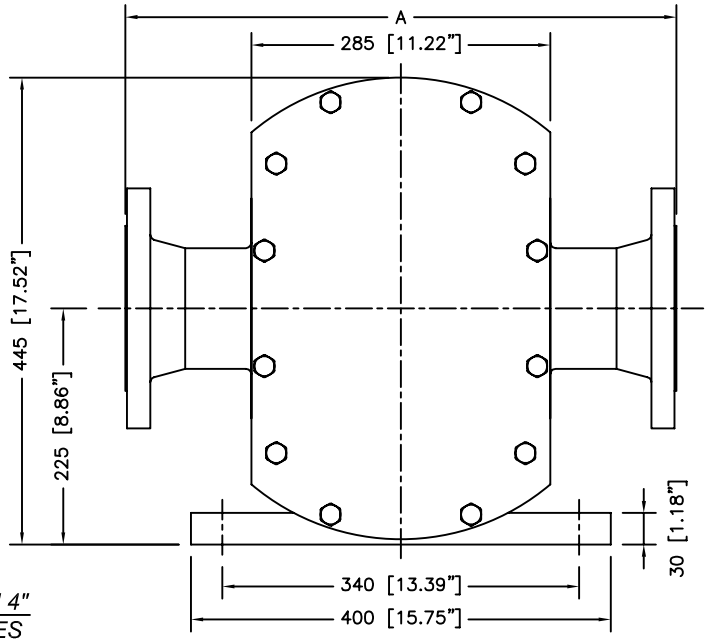


*UNIBLOC 600 WITH 4"*
*ANSI 150# FLANGES*

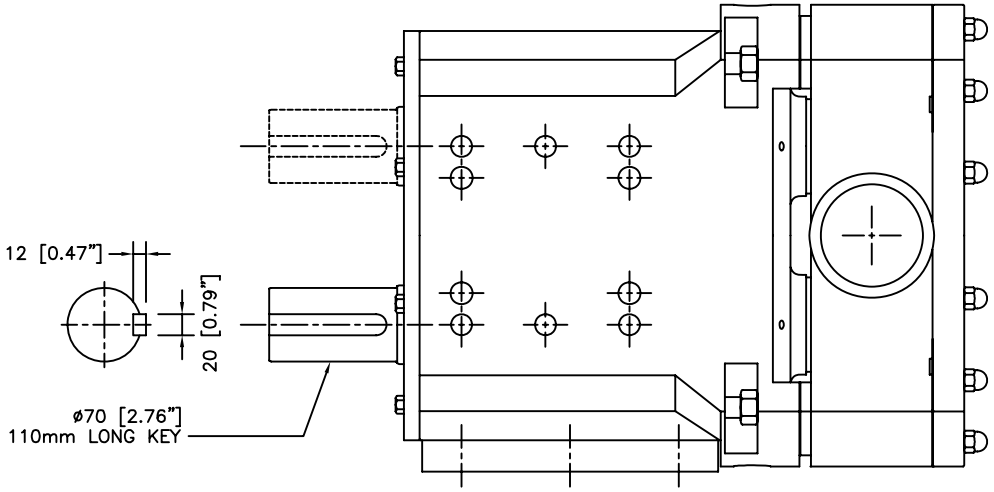


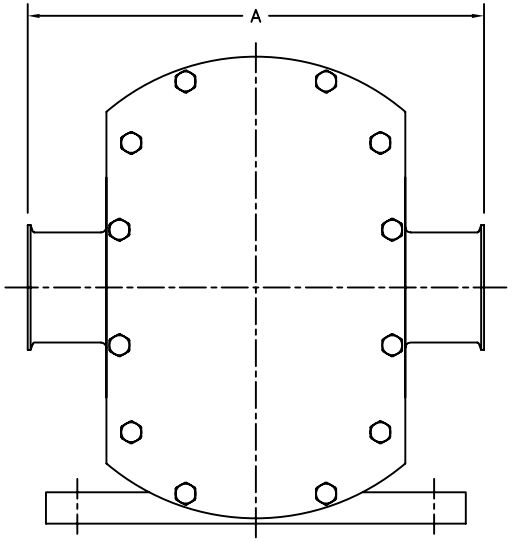


*UNIBLOC 600 WITH 4"*
*SANITARY CLAMP FLANGES*

| PORT TYPE | PORT SIZE | A mm | A in. |
|---|---|---|---|
| SANITARY TRICLAMP | 4" | 435 | 17.1 |
| ACME | 4" | 435 | 17.1 |
| DIN 11851 | DN100 | 435 | 17.1 |
| ANSI 150# FLANGE | 4" | 525 | 20.7 |
| ANSI 300# FLANGE | 4" | 525 | 20.7 |
| DIN 16 BAR FLANGE | DN100 | 525 | 20.7 |

THIS DRAWING AND ALL IDEAS INCORPORATED IN ITS DESIGN IS THE EXCLUSIVE PROPERTY OF FLOWTECH, Inc. ITS ACCEPTANCE CONSTITUTES AN AGREEMENT THAT IT SHALL BE TREATED AS A CONFIDENTIAL DOCUMENT USED FOR NO OTHER PURPOSE THAN TO AID IN ITS CONSTRUCTION, THAT IT IS TO BE RETURNED UPON REQUEST, AND THAT IT IS NOT TO BE DISCLOSED OR COPIED EXCEPT AS AUTHORIZED IN WRITING BY TEKNOFLOW, INC./FLOWTECH DIV.

| | BY | DATE |
|---|---|---|
| DRAWN | BAP | 04/24/09 |
| CHECKED | | |
| APP'D | | |
| SCALE | 1:3.5 | |

ALL DIMENSIONS IN MM

**FLOWTECH** DIV.
UNIBLOC-PUMP, INC. USA

DWG. TITLE
GENERAL DIMENSIONS

SIZE 602

DWG. NO. D2-602A

RELEASE DATE APR. 24, 2009

SHEET 1 OF 1